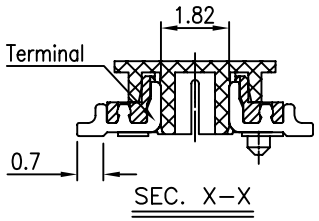

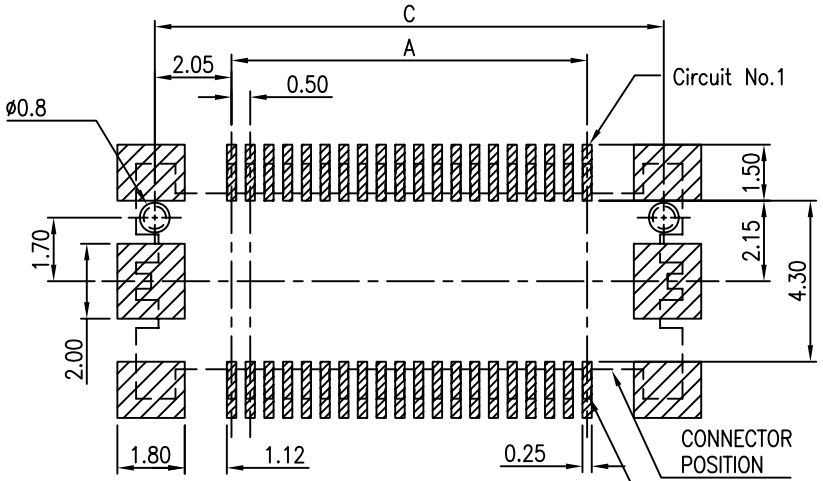

RECOMMEND PCB LAYOUT

TOLERANCE ±0.05

NOTES:
1. MATERIAL:
   1.1 HOUSING: THERMOPLASTIC, HIGH TEMP., UL94V–0;
   1.2 CONTACT: COPPER ALLOY
   1.3 FITTING NAIL: COPPER ALLOY
2. FINISH:
   2.1 CONTACT:
   GOLD FLASH PLATING(1~3u") OVER ALL
   OR 100~200u" MATT TIN PLATING OVER ALL
   50~100u" NICKEL UNDERPLATING OVER ALL
   2.2 FITTING NAIL:
   100~200u" PURE MATT TIN PLATING OVER ALL
   50~100u" NICKEL UNDERPLATNG OVER ALL
3. REFLOW SOLDER CAPABLE TO 260°C PER ACES SPEC
4. SPEC. PLS. REFER TO PS–50047–xxxxx–xxx
5. PACKAGE PLS. REFER TO PARE NUMBER
6. PART NUMBER

50048–XXX X X–XXX

NO OF CKT

PLATING
1: GOLD FLASH OVER ALL
N: MATT TIN

PACKING
7:TAPE REEL WITH COVER
8:TUBE PACKAGE WITH COVER

XXX	COLOR	HALOGEN FREE	PACKING	WITH BOSS
001	BLACK	HF	88134-XXXX-TRP	YES
002	BLACK	HF	88134-XXXXX-XX-TRP	NO
W01	BLACK	HF	88134-XXXXW-TRP	YES

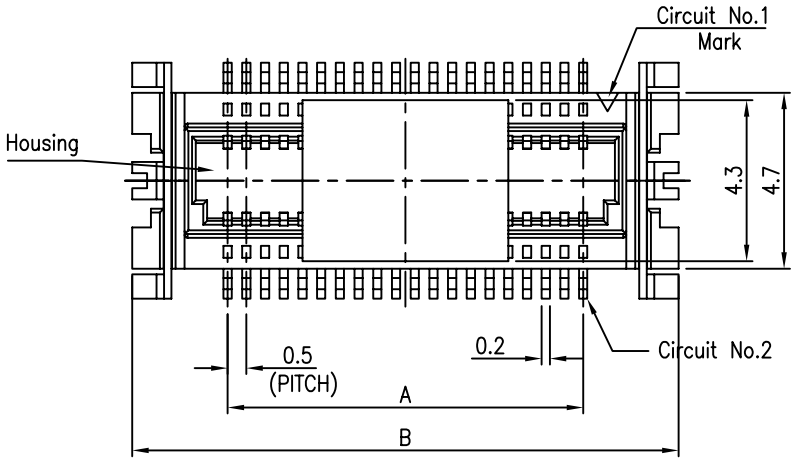

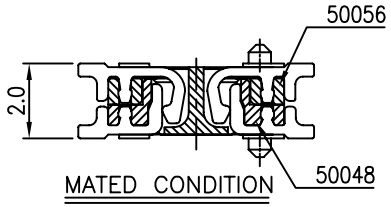

MATED CONDITION

CKT	Dim A	Dim B	Dim C
10	2.0	7.1	6.1
14	3.0	8.1	7.1
16	3.5	8.6	7.6
20	4.5	9.6	8.6
24	5.5	10.6	9.6
30	7.0	12.1	11.1
34	8.0	13.1	12.1
36	8.5	13.6	12.6
40	9.5	14.6	13.6
50	12.0	17.1	16.1
60	14.5	19.6	18.6
70	17.0	22.1	21.1
80	19.5	24.6	23.6

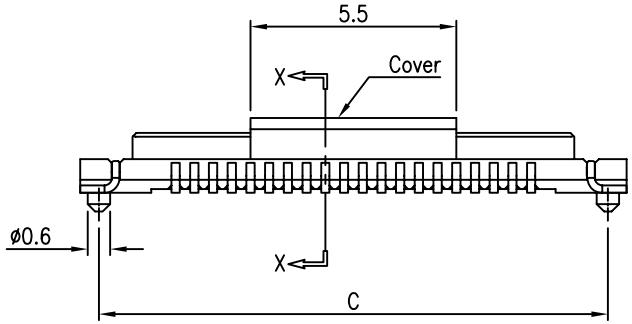

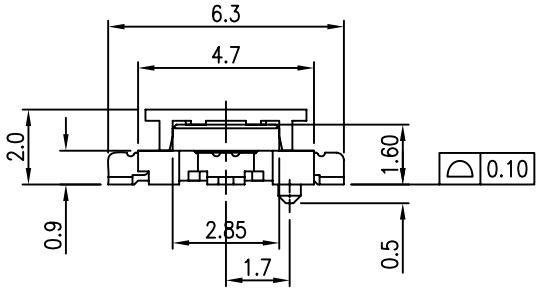

一般公差 TOLERANCES X. ±0.5 .XX ±0.15 .X ±0.25 .XXX ±0.1 ANGLES ±2°	宏致電子股份有限公司 Aces Electronic Co.,Ltd.				
檢驗尺寸標示 SYMBOLS CR MA INDICATE CLASSIFICATION DIMENSION CR MARK IS CRITICAL DIM. MA MARK IS MAJOR DIM.	品名 (TITLE) 0.5mm BTB D/R PLUG SMT S/T TYPE			製圖 (DR) 11'/12/14 GAVIN	
	圖號 (DWG.NO) 50048–XXXXX–XXX			審核 (CHKD) SAM	
				核准 (APPD) JASON	
表面處理 (FINISH)	比例 (SCALE) 1:1	單位 (UNITS) mm		張數 (SHEET) 1 OF 1	SIZE A4 REV B